Base Specifications

Send

inter•lux

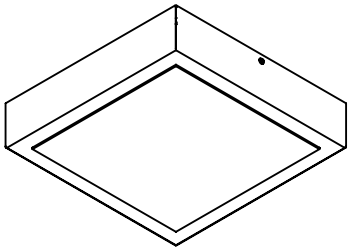

PERSPECTIVE VIEW

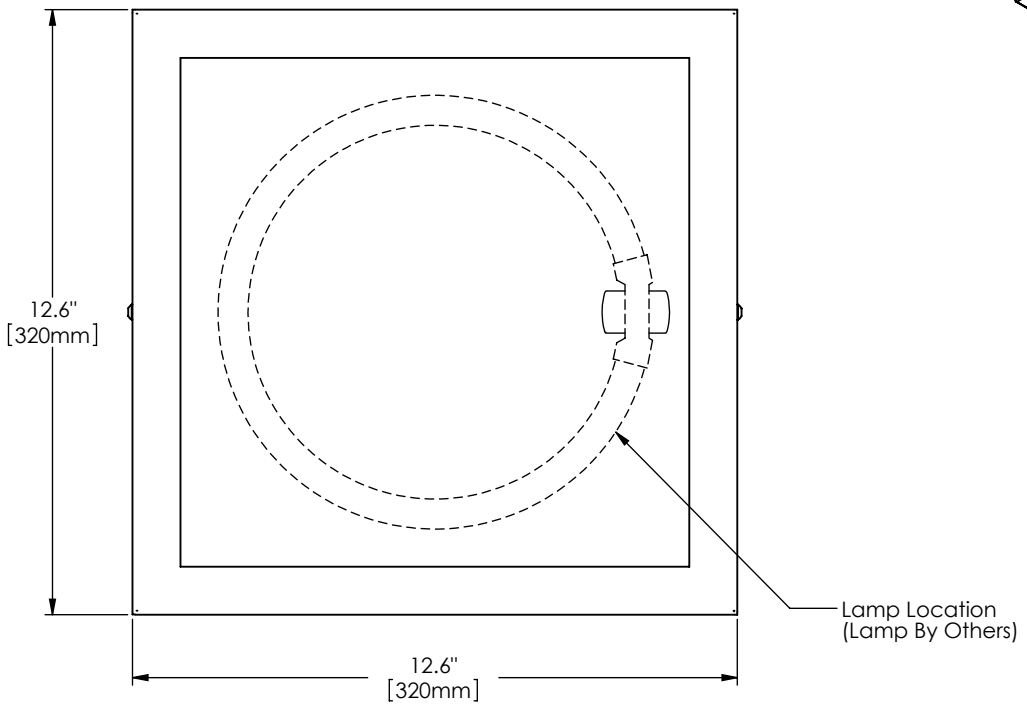

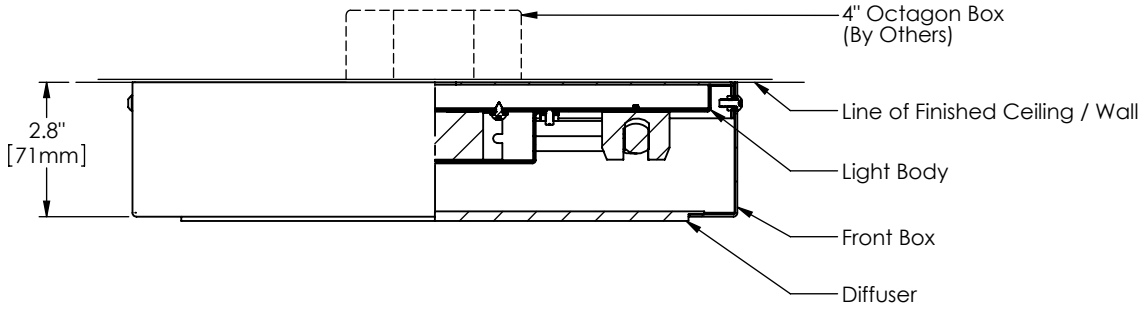

1800	S	33	SW	10	12.6	1	
Series	Style	Lamp	Diffuser	Finish	Size	Voltage	Options
	S - Surface	33 - 1 x 22 Watt / 2GX13	SW - Satin White Opal Acrylic	10 - Satin Stainless Steel 12 - Satin Nickel 21 - Painted White 22 - Painted Custom Color	12.6"	U - 120-277 V 1 - 120 V 2 - 220-240 V 3 - 277 V	DM - Specify Dimming Ballast Consult The Factory EM - Fluorescent Emergency, Battery - Remote Other _____

410 381 1497 inter-lux.com answers@inter-lux.com
Inter-lux reserves the right to make technical changes without notice.