Ring UD

TECHNICAL SHEET

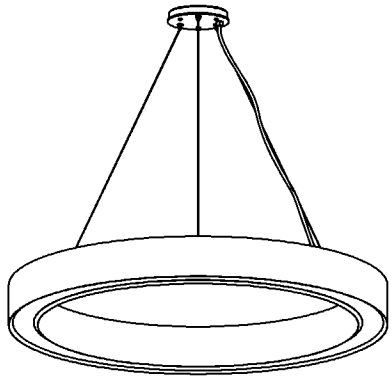

PERSPECTIVE VIEW

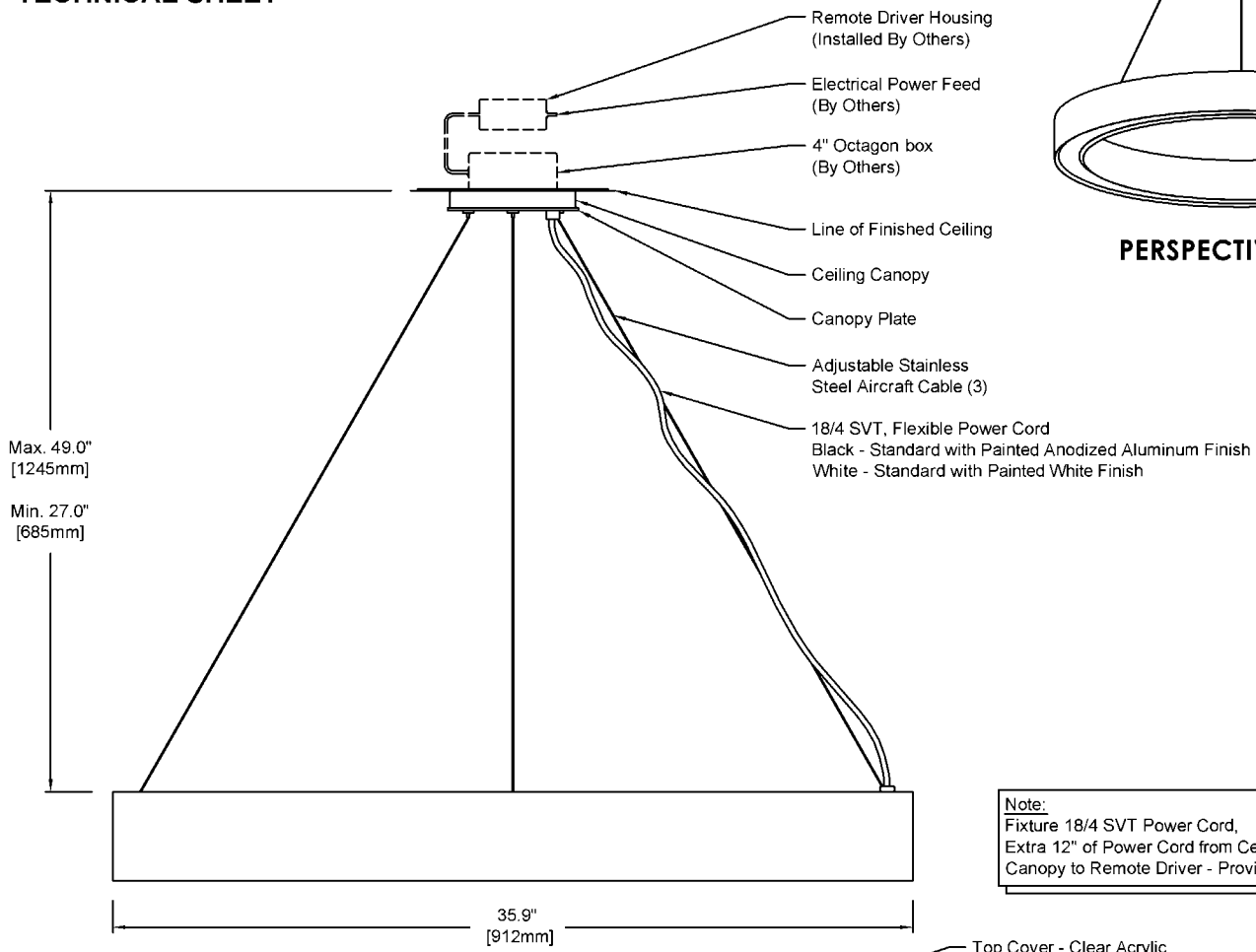

Note:
Fixture 18/4 SVT Power Cord,
Extra 12" of Power Cord from Ceiling
Canopy to Remote Driver - Provided

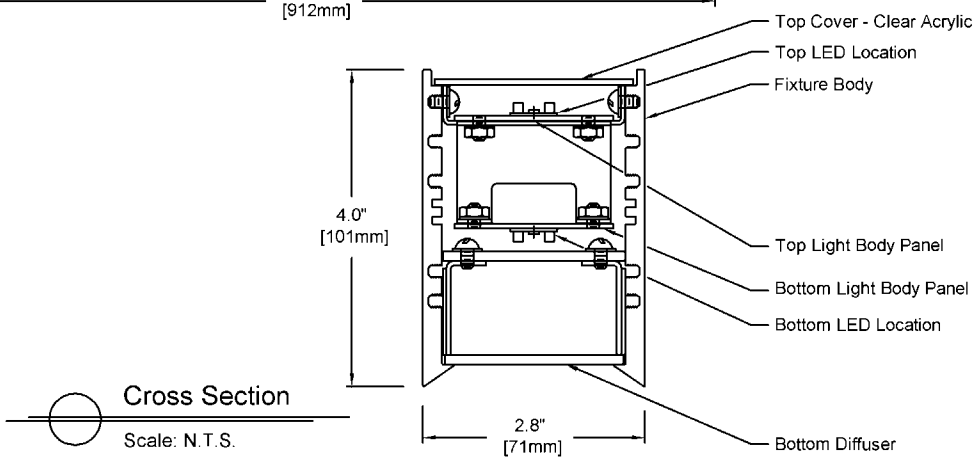

Cross Section
Scale: N.T.S.

Fixture Weight: 22 lbs

1692	P	MP	K30	SW	19	36	U	RD	DC
Series	**Style**	**Lamp**	**Color Temp.**	**Diffuser**	**Finish**	**Size**	**Voltage**	**Power Supply**	**Control**
	P - Pendant	LP - 3 Watt/foot MP - 6 Watt/foot HP - 10 Watt/foot	K30 - 3000K K35 - 3500K K40 - 4000K	SW - Satin White Opal Acrylic	19 - Painted Anodized Aluminum 21 - Painted White 22 - Painted Custom Color	36"	U - 120 - 277 V 2 - 220 - 240 V	RD - Remote Mounted Driver (Ordered Separately)	SC - Single Control DC - Dual Control (Please Check Technical Sheet and Specify)

LED (24 Volt Constant Voltage) and Power Supply

OT96-D010 = Osram, 10%, 0-10V dimming, 120-277V, 96W
LUT96-L3D0 = Lutron, 0.1%, EcoSystem or 3-wire dimming, 120-277V, 96W
Other - Please consult the factory

LED "LP" - 3 Watt/foot, Total Watt - 50
400 lm/foot, 3000K, Total Lumen - 6,667
416 lm/foot, 3500K, Total Lumen - 6,934
424 lm/foot, 4000K, Total Lumen - 7,067

LED "MP" - 6 Watt/foot, Total Watt - 100
743 lm/foot, 3000K, Total Lumen - 12,384
774 lm/foot, 3500K, Total Lumen - 12,900
789 lm/foot, 4000K, Total Lumen - 13,150

LED "HP" - 10 Watt/foot, Total Watt - 167
1,174 lm/foot, 3000K, Total Lumen - 19,567
1,222 lm/foot, 3500K, Total Lumen - 20,367
1,246 lm/foot, 4000K, Total Lumen - 20,767

Technical Data:
Form - linear, Operating voltage: 24VDC
Color rendering index Ra min: 82CRI
Viewing angle: 110°
Lifetime - L70: 60,000h
Working temperature: -20°C to 60°C (-4°F to 140°F)

Maximum wiring distance for # 18 AWG
Osram, 96 Watt, Dimming - 32 feet
Lutron, 96 Watt, Dimming - 25 feet

inter•lux

All specifications subject to change without notice © 2010

Ring LED Power Supplies

inter•lux

Wiring Diagrams

OT96-D010 (Osram 10%, 0-10V)

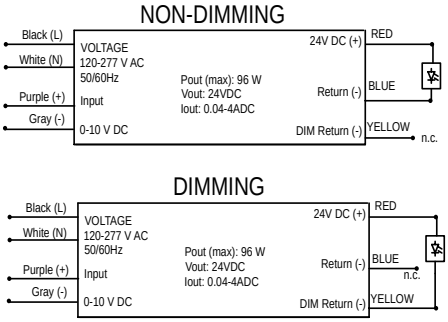

LUT96-L3D0 (Lutron 0.1%, 3-wire)

Wiring Diagram for 3-Wire Control

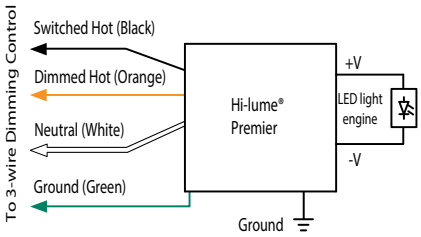

Note: Colors shown correspond to terminal blocks on driver.

LUT96-L3D0 (Lutron 0.1%, EcoSystem digital)

Wiring Diagram for EcoSystem® Digital Control

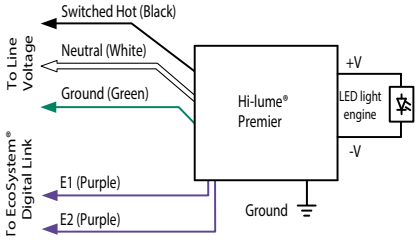

Note: Colors shown correspond to terminal blocks on driver.

Driver requirements

Ring UD - 24"
LP - Low Power Option:
- Single control - 1 x driver
- Dual control - 2 x drivers
MP - Medium Power Option:
- Single control - 1 x driver
- Dual control - 2 x drivers
HP - High Power Option:
- Single control - 2 x drivers
- Dual control - 2 x drivers

Ring UD - 30"
LP - Low Power Option:
- Single control - 1 x driver
- Dual control - 2 x drivers
MP - Medium Power Option:
- Single control - 1 x driver
- Dual control - 2 x drivers
HP - High Power Option:
- Single control - 2 x drivers
- Dual control - 2 x drivers

Ring UD - 36"
LP - Low Power Option:
- Single control - 1 x driver
- Dual control - 2 x drivers
MP - Medium Power Option:
- Single control - 2 x drivers
- Dual control - 2 x drivers
HP - High Power Option:
- Single control - 2 x drivers
- Dual control - 2 x drivers

LED Technical data:

Form - linear, Operating voltage: 24VDC
Color rendering index Ra min: 82CRI
Viewing angle: 110°
Lifetime - L70: 60,000h
Working temperature: -20°C to 60°C (-4°F to 140°F)

Wiring Notes

1. Please specify Single or Dual control.
2. Refer to maximum wire distance chart below for additional wiring requirements.

Standard enclosure supplied with drivers shown above.

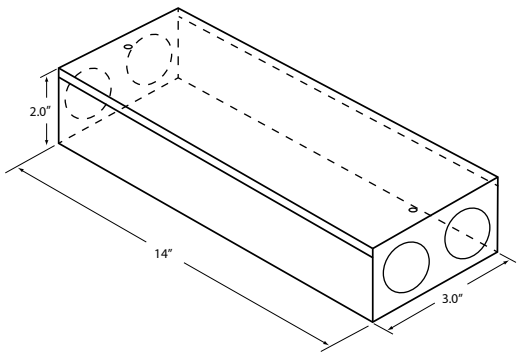

OT96-D010 (Osram 0 -10 V) driver enclosure

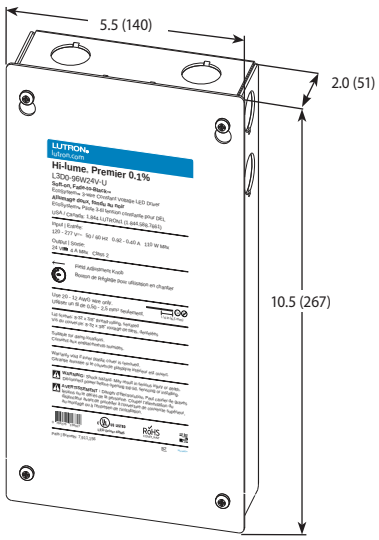

LUT96-L3D0 (Lutron) driver enclosure

Maximum wiring distance*

	Load per driver	
	Osram	Lutron
Wire gauge	≤96W	≤96W
#18AWG	18′	25′
#16AWG	29′	40′
#14AWG	47′	60′
#12AWG	75′	100′
#10AWG	120′	150′

*Voltage drop guide for 24VDC. Actual Voltage drop to be calculated by installer

410 381 1497 inter-lux.com answers@inter-lux.com
Inter-lux reserves the right to make technical changes without notice.